SV green

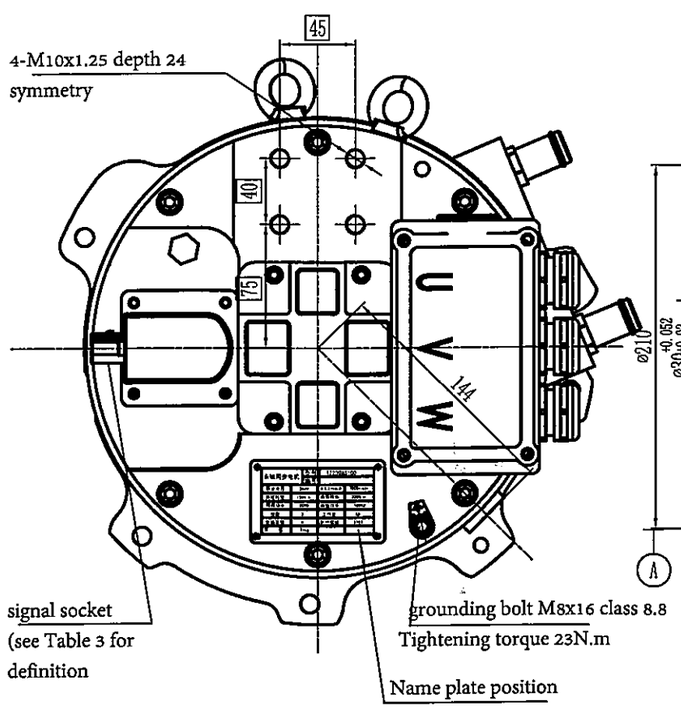

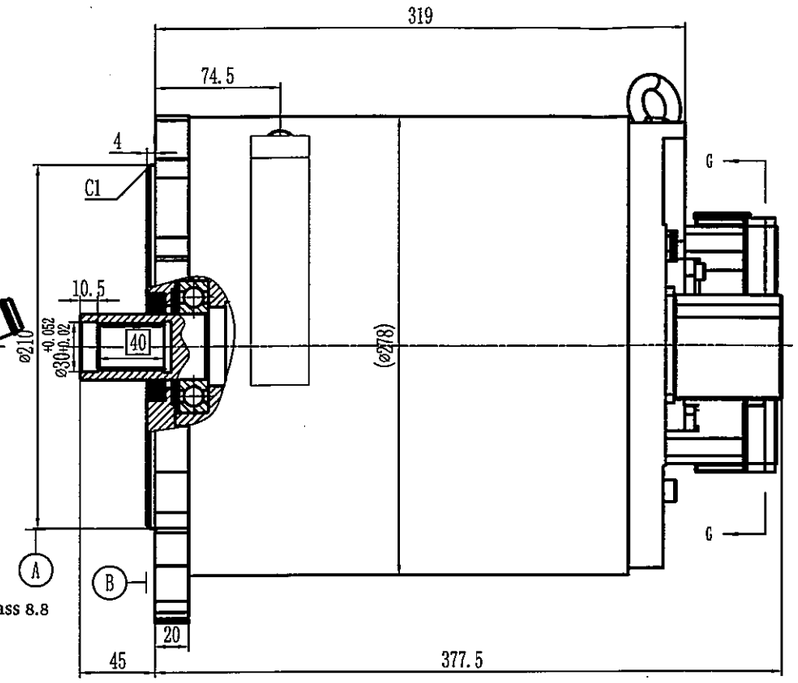

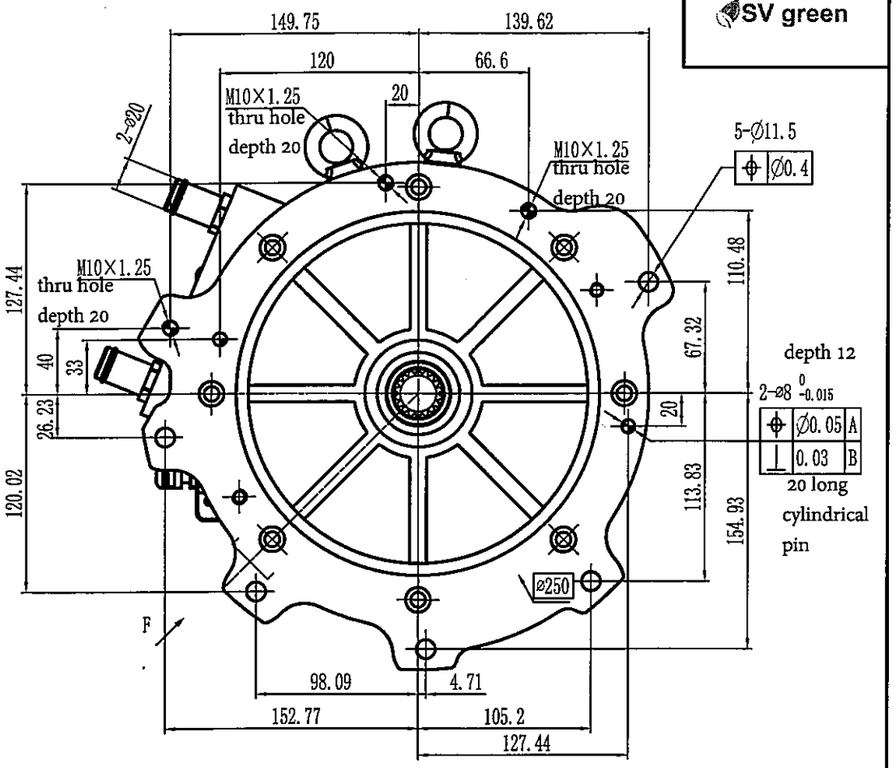

Siganl socket

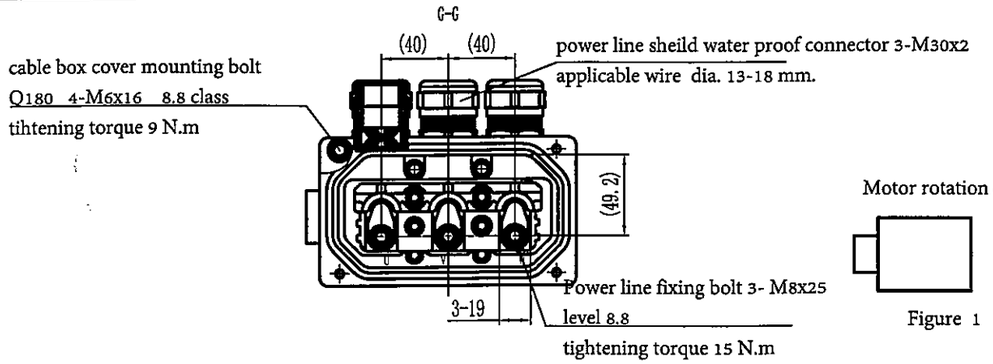

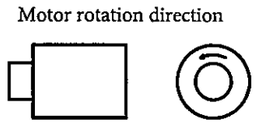

Figure 1

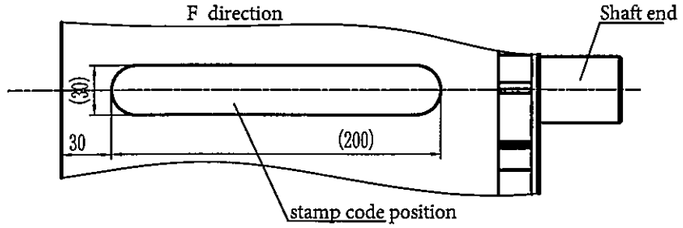

Table 3 : signal definition

signal socket : Molex :477256010

mating plug :Molex 33472-1206

or consult factory for other type

pin number	colour	signal def.	remark
3		N.C.	
4		N.C.	
1	blk	Temp_L2	NTC
2	blk	Temp_H2	
5	blk	Temp_L1	NTC
6	blk	Temp_H1	
10	green	cos-	Resolver signal
7	yellow	cos+	
12	blue	sin-	
9	white	sin+	
8	black	R-	
11	red	R +	

Table 1: Motor parameters

parameter	spec.	parameter	spec.
batt. voltage	DC384V	rate Torque	160 N.m
rated power	50kW	Peak torque	420N.m
peak power	120kW	Insulation class	H
rated speed	3000r/min	protection	IP67
peak speed	7000r/min	cooling method	Liquid cool
peak current	450Arms	Weight	70Kg

Table 2: motor cooling system

coolant flow	12L/min	water channle volumn	0.95L
coolant type	auto antifreeze	max. pressure	<200Kpa

Techical details and Requirement

1.unmarked size shall beexecuted according to GB/T1184-k with position difference

2.main parameters of motor are shown in Table 1 and definition of low voltage signal shown in Table 3

3. electrical insulation resistance of motor to Ground is n 20 M ohm at 500V winding to Ground withstan voltage 2000V ,no strike for 1 min. leakage current less than 100mA

4. Thermistor model : TR/09-G034 / NTC

5. pressure resistance of cooling system is 0.2 Mpa , 5min , no leakage

6.user installation bolts are tightened according to specified mentioned

7. direction of motor rotation is shown in figure 1

8. effiective length of the spilne is not less than 37 mm.

9. initial angle of the division is adjusted to 180 degree

10. surface of motor is sprayed with XD103 aluminium paint and shaft extension and mating surface are rust-proof